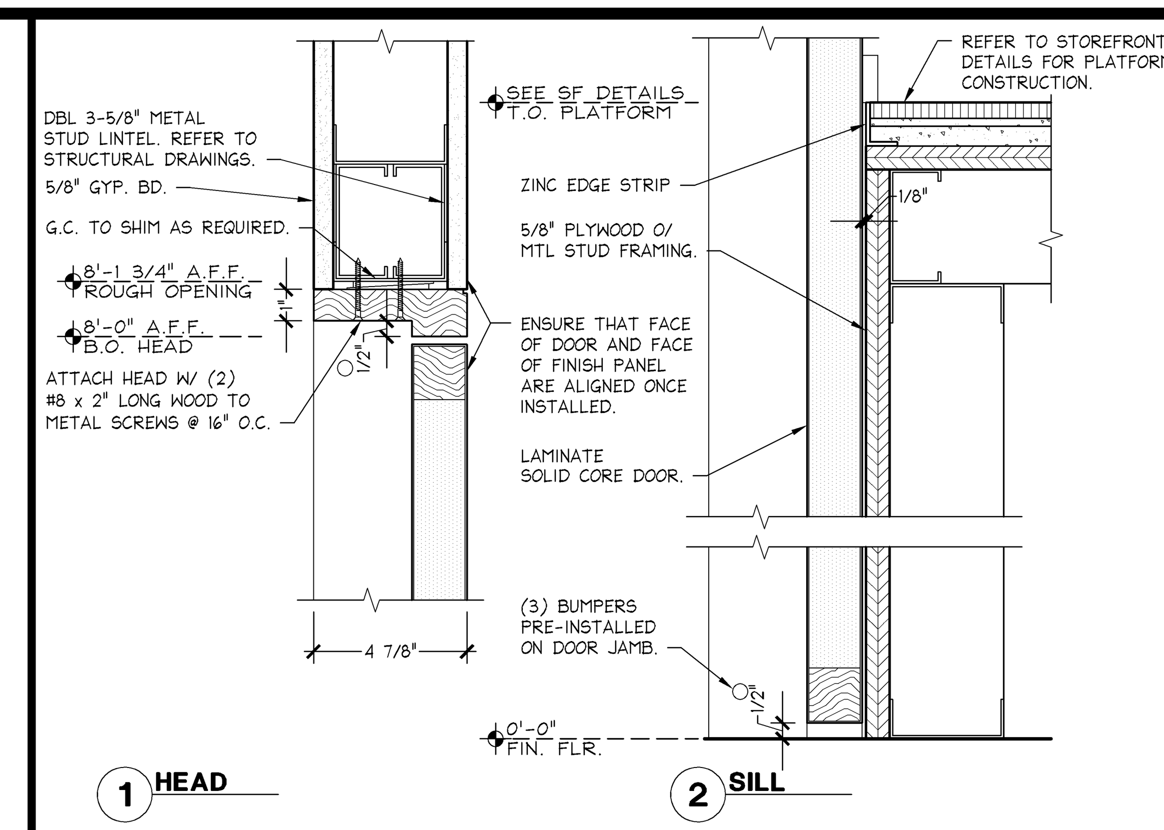

VSS DISPLAY WINDOW BLIND DOOR HEAD AND SILL DETAIL — 3" = 1'-0" — 05D-A1109-D00-DETL — D — 02.21.14

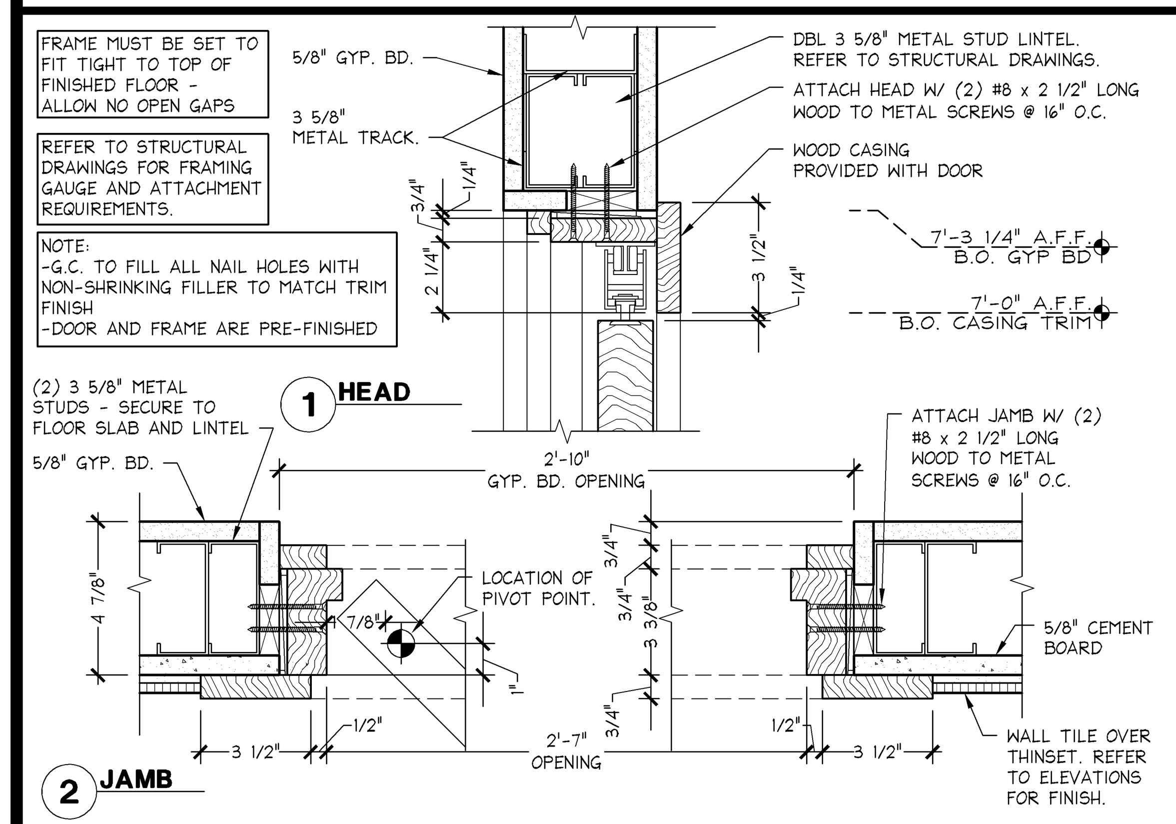

MOP CLOSET DOOR: SINGLE BI-FOLD JAMB / HEAD DETAIL — 3" = 1'-0" — 05D-A1109-R00-DETL — R — 04.04.14

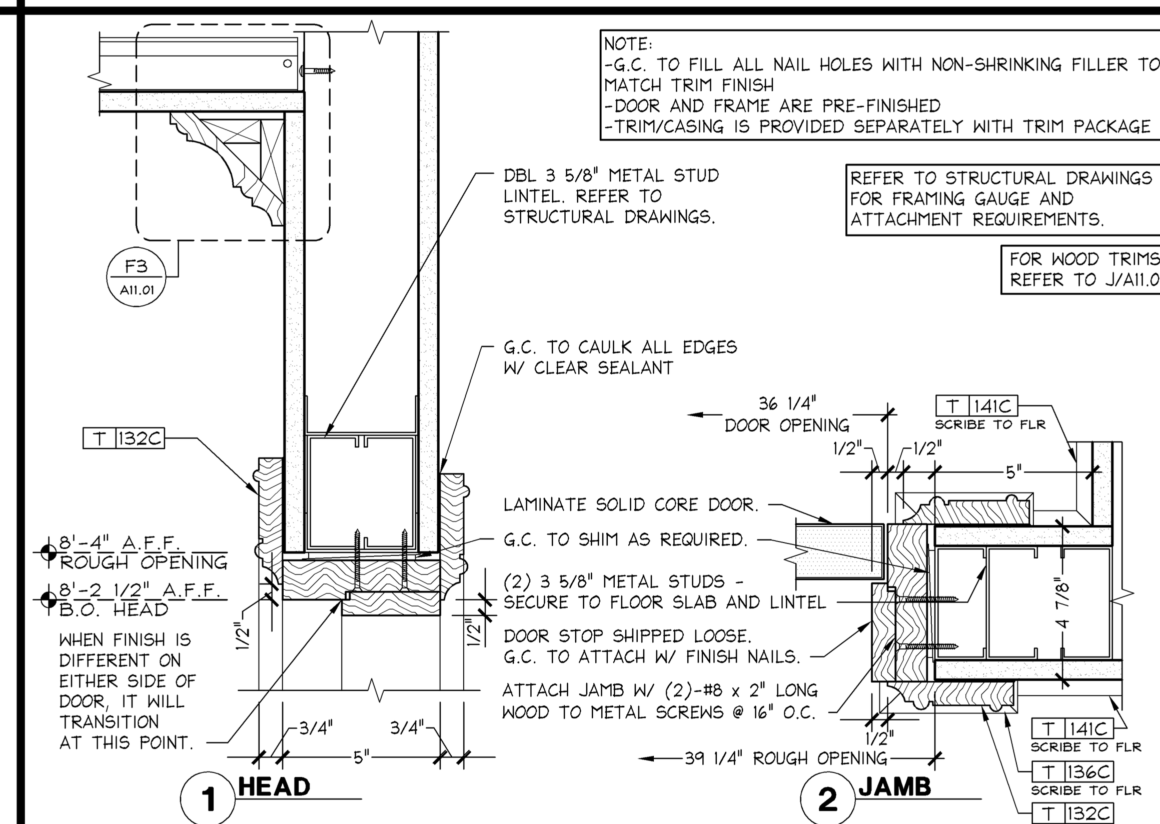

VSS FITTING ROOM DOOR JAMB / HEAD DETAIL — 3" = 1'-0" — 05D-A1109-G00-DETL — G — 02.21.14

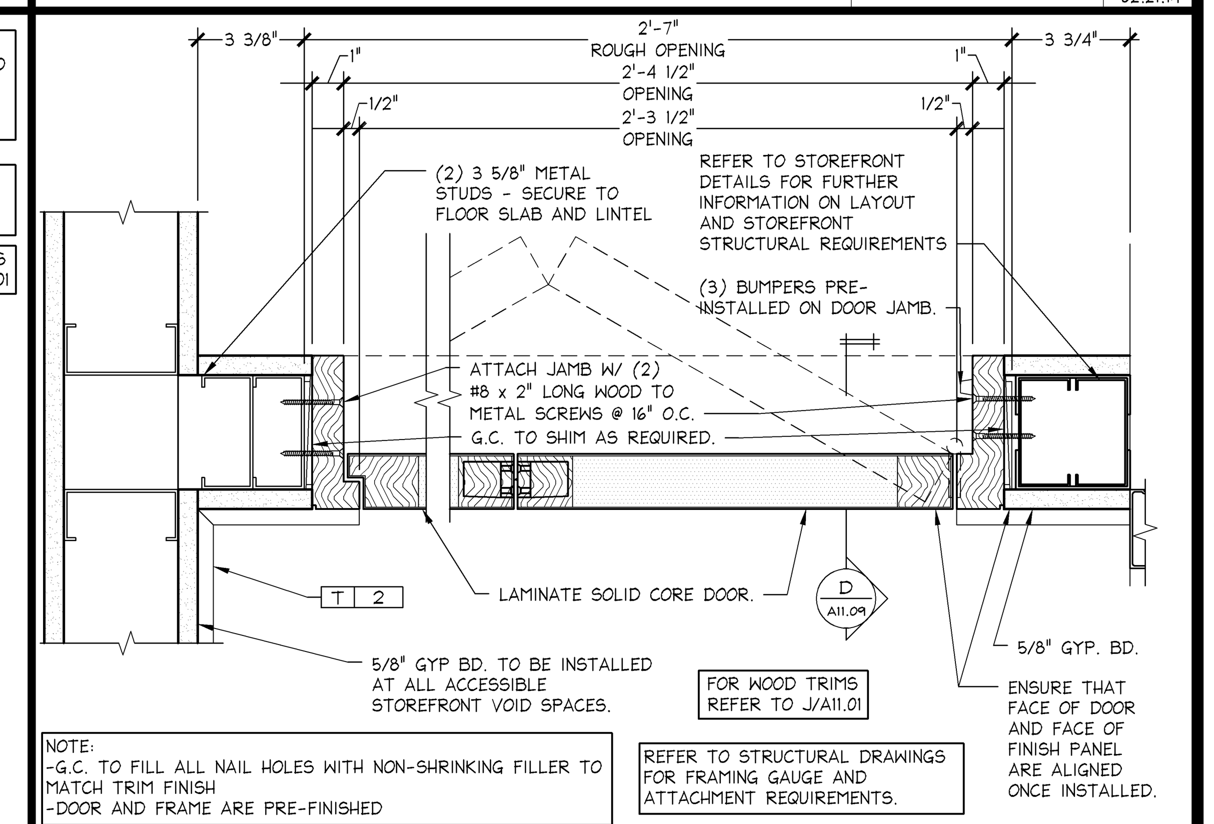

VSS DISPLAY WINDOW BLIND DOOR JAMB DETAIL — 3" = 1'-0" — 05D-A1109-C00-DETL — C — 02.21.14

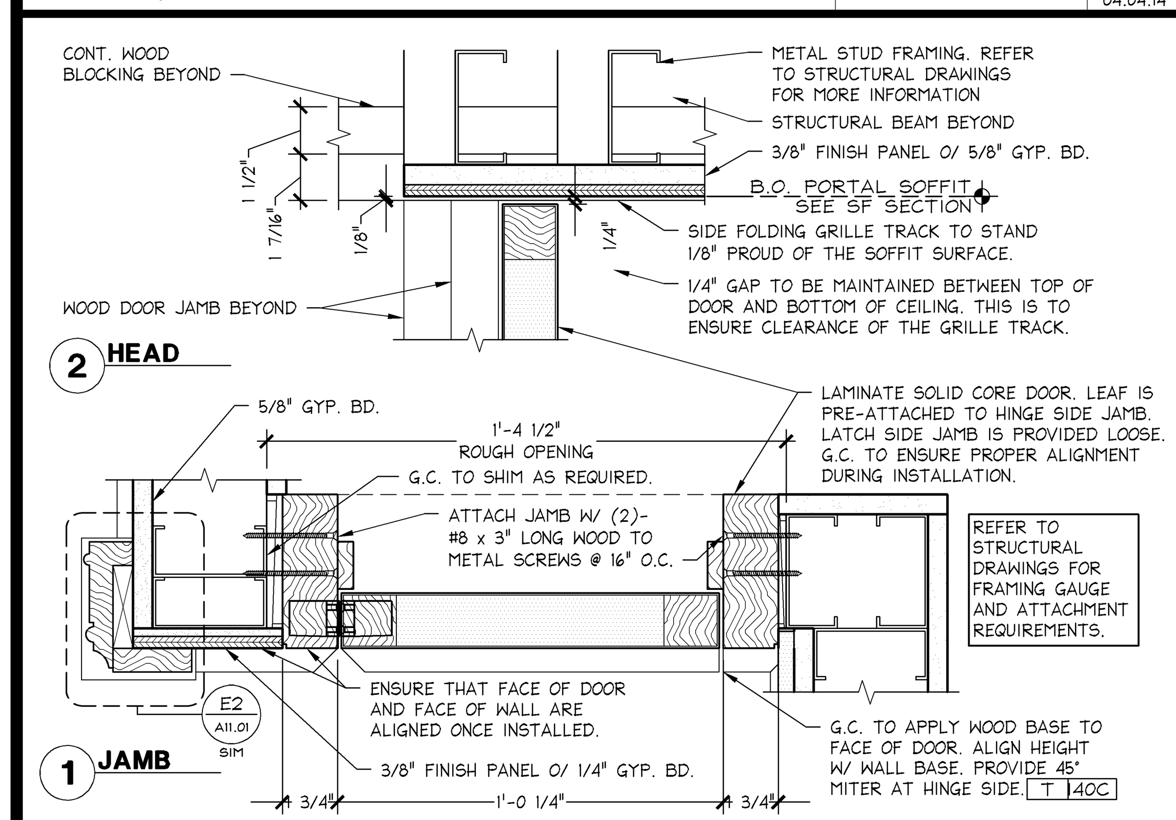

SIDE FOLD GRILLE POCKET DOOR JAMB AND HEAD DETAIL — 3" = 1'-0" — 05D-A1109-P00-DETL — P — 02.21.14

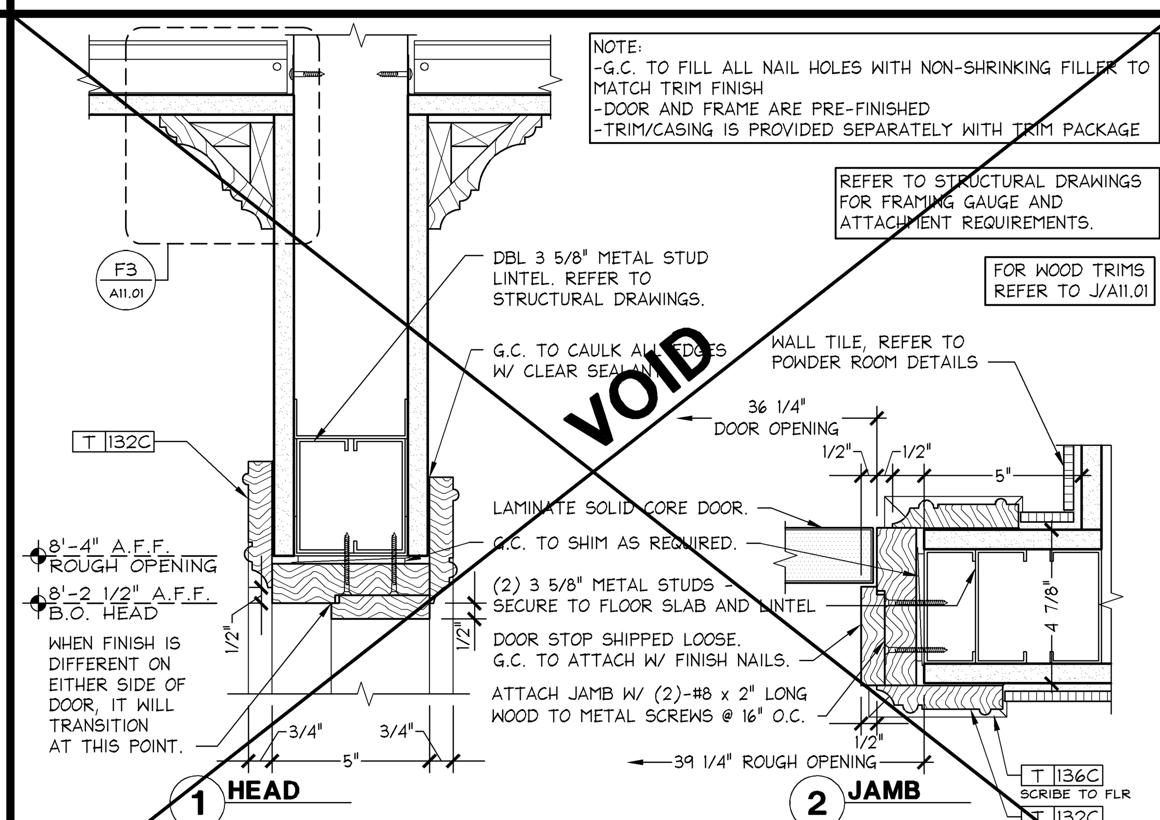

VSS POWDER ROOM STALL DOOR JAMB/HEAD — 3" = 1'-0" — 05D-A1109-K00-DETL — K — 02.21.14

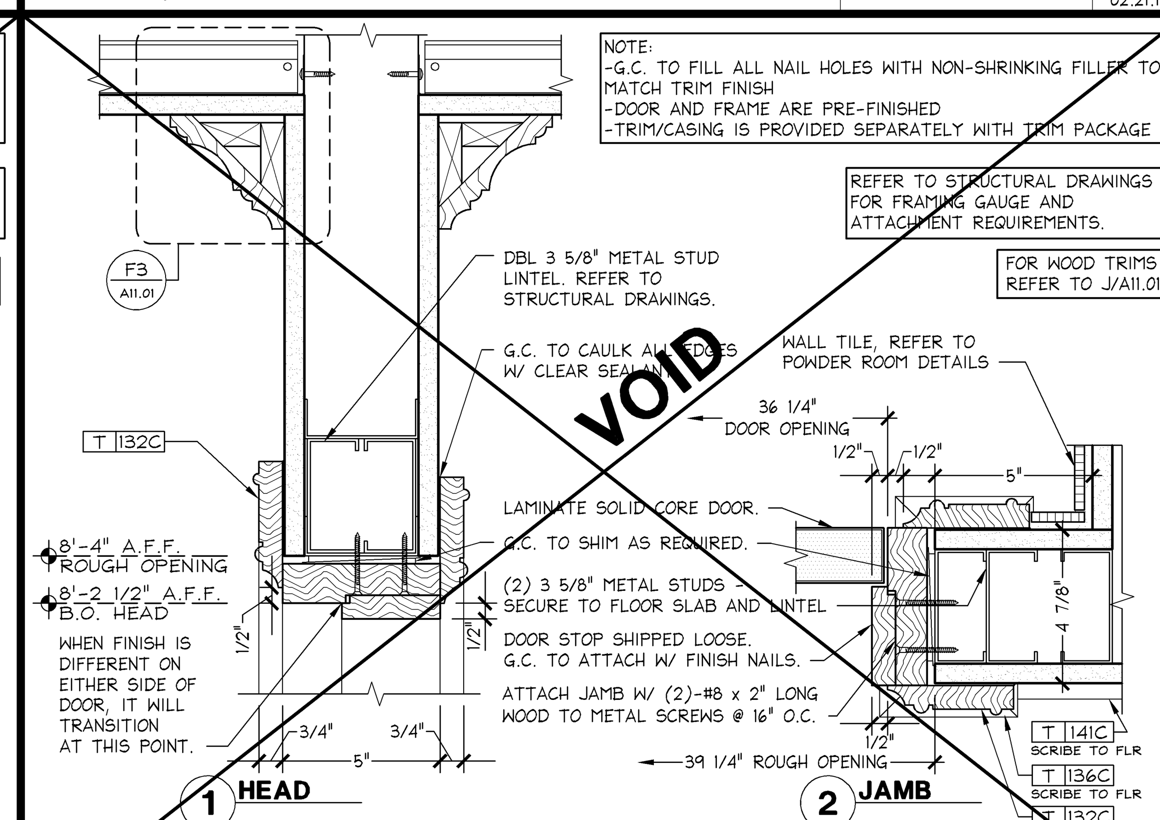

VSS POWDER ROOM DOOR JAMB/HEAD — 3" = 1'-0" — 05D-A1109-F02-DETL — F — 02.22.14

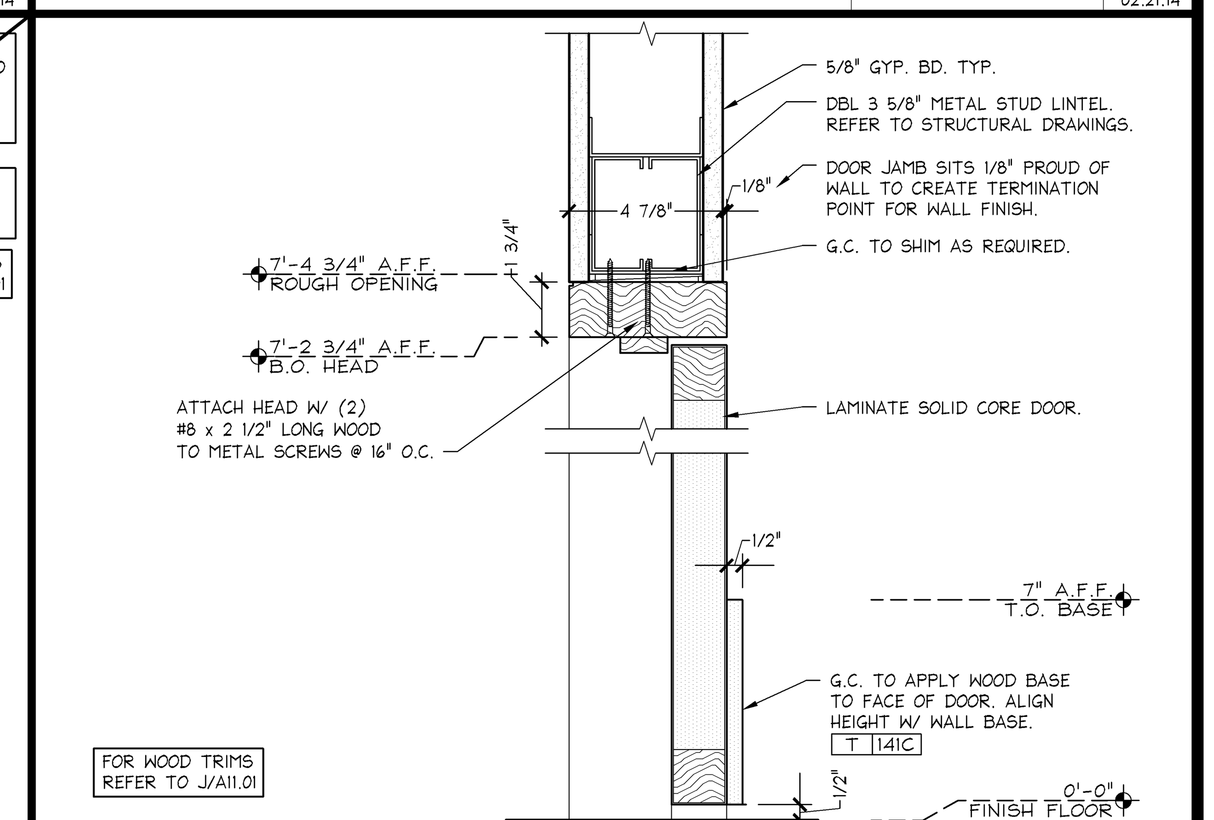

VSS STOREFRONT BLIND DOOR HEAD DETAIL — 3" = 1'-0" — 05D-A1109-B00-DETL — B — 02.21.14

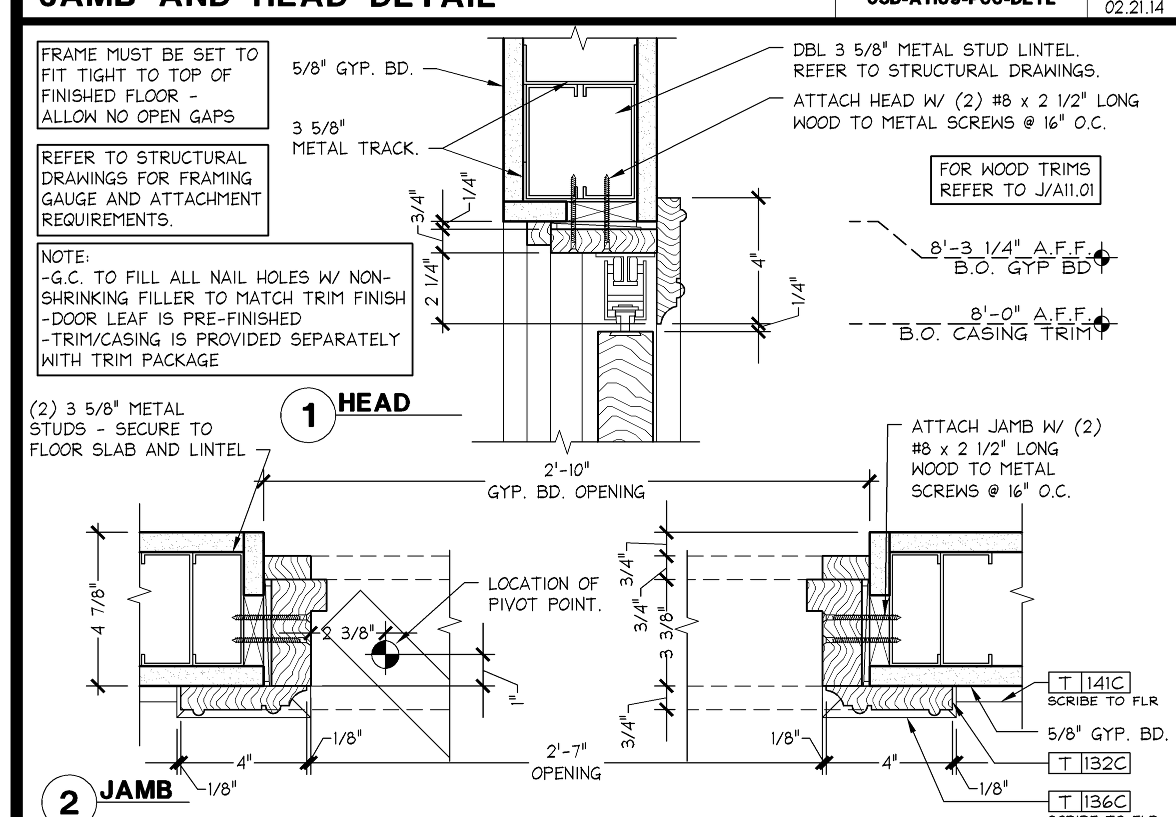

VSL CLOSET DOOR: SINGLE BI-FOLD JAMB / HEAD DETAIL — 3" = 1'-0" — 05D-A1109-N00-DETL — N — 02.21.14

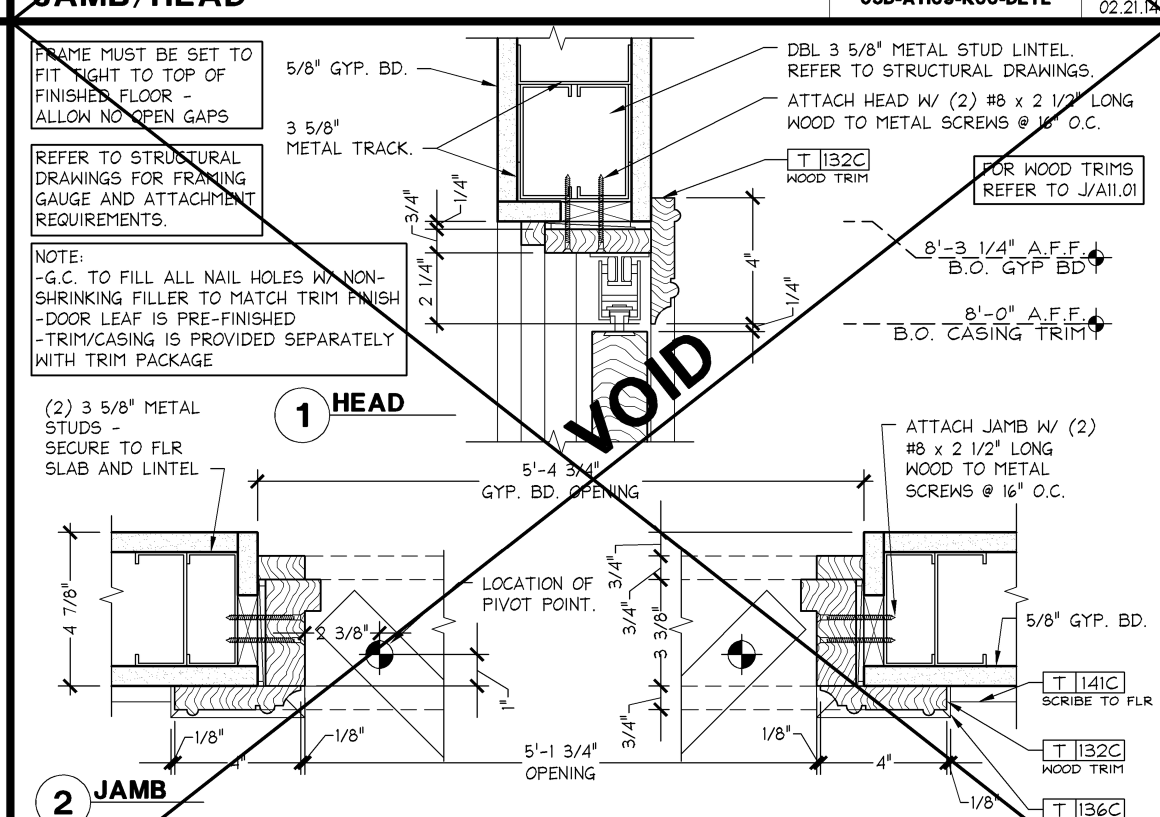

VSL CLOSET DOOR: DOUBLE BI-FOLD JAMB / HEAD DETAIL — 3" = 1'-0" — 05D-A1109-J00-DETL — J — 02.21.14

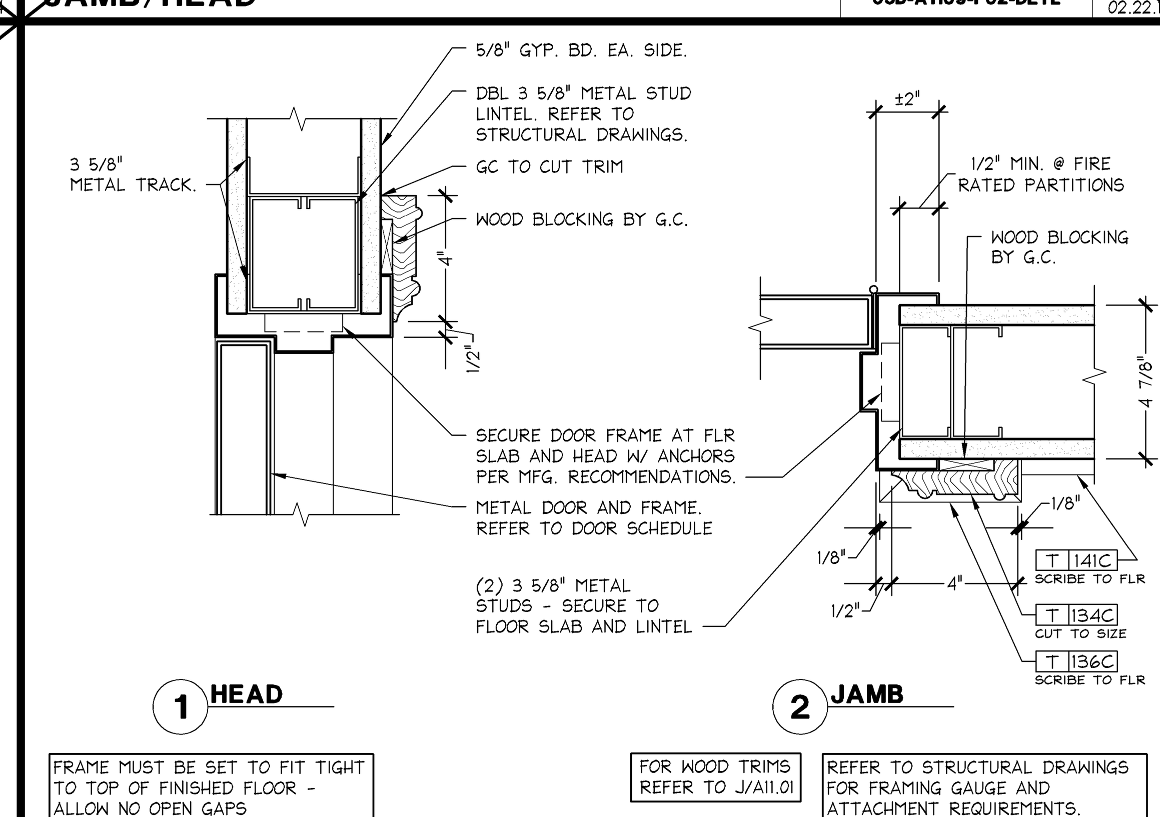

VSS DOOR JAMB / HEAD DETAIL SALES TO NON-SALES — 3" = 1'-0" — 05D-A1109-E00-DETL — E — 02.21.14

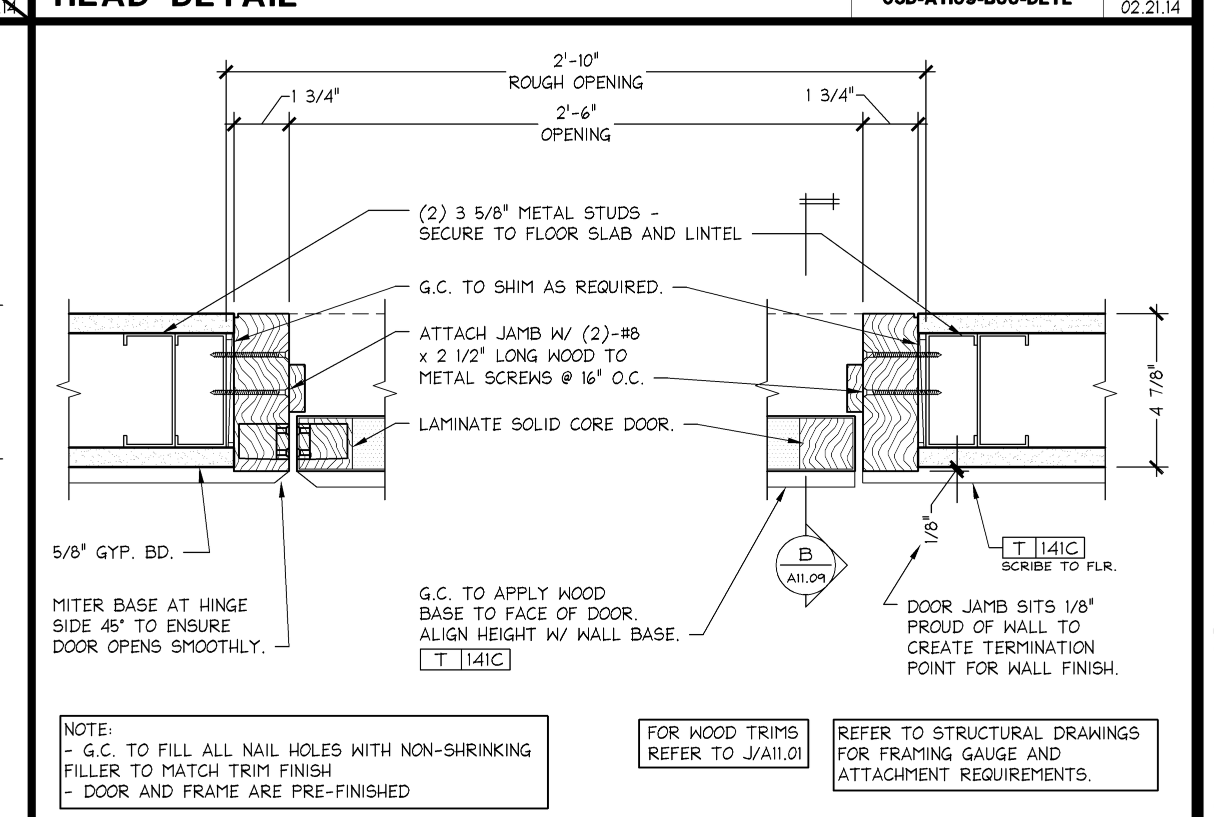

VSS STOREFRONT BLIND DOOR JAMB DETAIL — 3" = 1'-0" — 05D-A1109-A00-DETL — A — 02.21.14

SHREMSHOCK
Shremshock Architects, Inc.
6130 S. Sunbury Rd. Westerville, OH 43081
t: 614 545 4550 | f: 614 545 4555 | shremshock.com
Gerald S. Shremshock, Architect
Timothy J. Shremshock, Architect

Limitedbrands
LIMITED STORE PLANNING, INC.
d/b/a STORE DESIGN & CONSTRUCTION
Three Limited Parkway · Columbus, Ohio 43230
Telephone: 614.415.7000 · Fax: 614.415.7349

PROHIBITION ON REUSE:
THESE DRAWINGS AND SPECIFICATIONS WERE PREPARED FOR USE ON A SPECIFIC SITE CONTEMPORANEOUSLY WITH THEIR ISSUE DATE. THEY ARE NOT INTENDED FOR USE ON A DIFFERENT PROJECT SITE OR AT A LATER TIME. REUSE OF THESE DRAWINGS AND SPECIFICATIONS, OR ANY REPRODUCTION THEREOF, ON ANOTHER PROJECT IS PROHIBITED AND CONTRARY TO LAW UNLESS EXPRESSLY AUTHORIZED IN WRITING BY LIMITED STORE PLANNING, INC., D/B/A LIMITED STORE DESIGN AND CONSTRUCTION ("LSDC").
THESE DRAWINGS AND SPECIFICATIONS ARE THE PROPERTY OF LSDC AND SHALL NOT BE DISPLAYED IN ANY MANNER OR USED ON ANY OTHER PROJECT EXCEPT BY WRITTEN AGREEMENT WITH LSDC. NO REPRODUCTION OF THESE DRAWINGS AND SPECIFICATIONS SHALL BE MADE WITHOUT THE WRITTEN AUTHORIZATION OF THE LSDC. ALL ORIGINALS OR REPRODUCTIONS OF THESE DRAWINGS AND SPECIFICATIONS MUST BE RETURNED TO LSDC UPON COMPLETION OF THEIR INTENDED USE, UNLESS OTHERWISE AGREED BY THE LSDC.
COPYRIGHT NOTICE:
THESE DRAWINGS AND SPECIFICATIONS ARE COPYRIGHTED AND SUBJECT TO COPYRIGHT PROTECTION AS AN "ARCHITECTURAL WORK" UNDER SEC. 102 OF THE COPYRIGHT ACT, 17 U.S.C. AS AMENDED DECEMBER 1990; KNOWN AS THE ARCHITECTURAL WORKS COPYRIGHT PROTECTION ACT OF 1990. THE PROTECTION INCLUDES, WITHOUT LIMITATION, THE OVERALL FORM, ARRANGEMENT AND COMPOSITION OF SPACES, AND ELEMENTS OF THE DESIGN. UNDER SUCH PROTECTION, UNAUTHORIZED USE OF THESE DRAWINGS AND SPECIFICATIONS MAY RESULT IN CESSATION OF CONSTRUCTION, BUILDING SEIZURE, AND/OR MONETARY LIABILITY.

010500295

PROJECT INFORMATION:

VICTORIA'S SECRET
PARK PLAZA MALL
6000 W. MARKHAM STREET
SPACE# 2050
LITTLE ROCK, AR 72205

SCOPE:	FULL REMODEL	PACKAGE:	PGK 2
DESIGN TYPE:	NMA	GENERATION:	FALL 2014 (141Fa)
LSD&C PROJECT #:	00059784	A/E PROJECT #:	140153

REVISIONS:

REQUIRED BY: DATE

ELITE CONSTRUCTION GROUP
LAKE JACKSON, TX
PHONE: 979-285-0712
NOTE: THESE PRINTS HAVE BEEN REDUCED BY 50 PERCENT. SCALE WILL BE 50 PERCENT OF WHAT IS NOTED ON PLANS.

DATE ISSUED:	05/23/2014
DESIGNED BY:	LC
DRAWN BY:	XXX
CHECKED BY:	JRM

DOOR DETAILS

DRAWING NUMBER:

A11.09